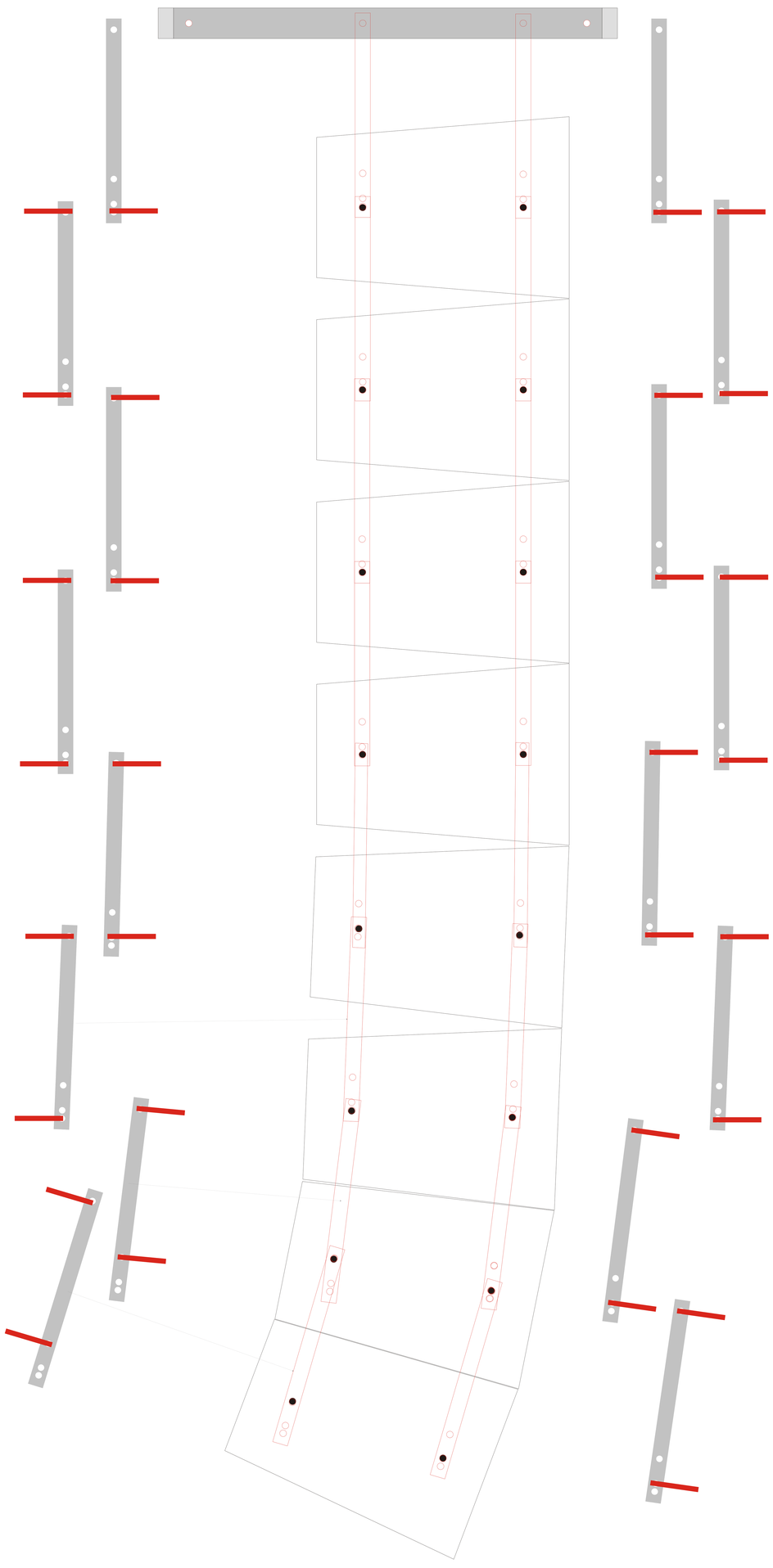

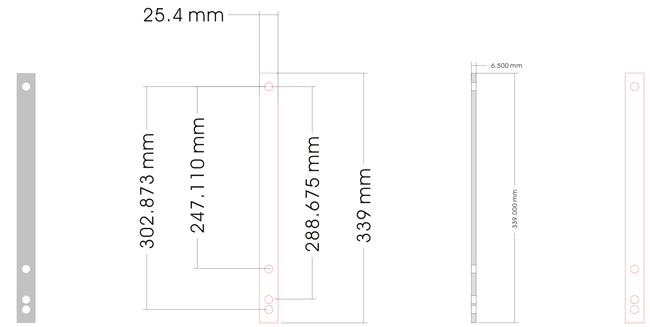

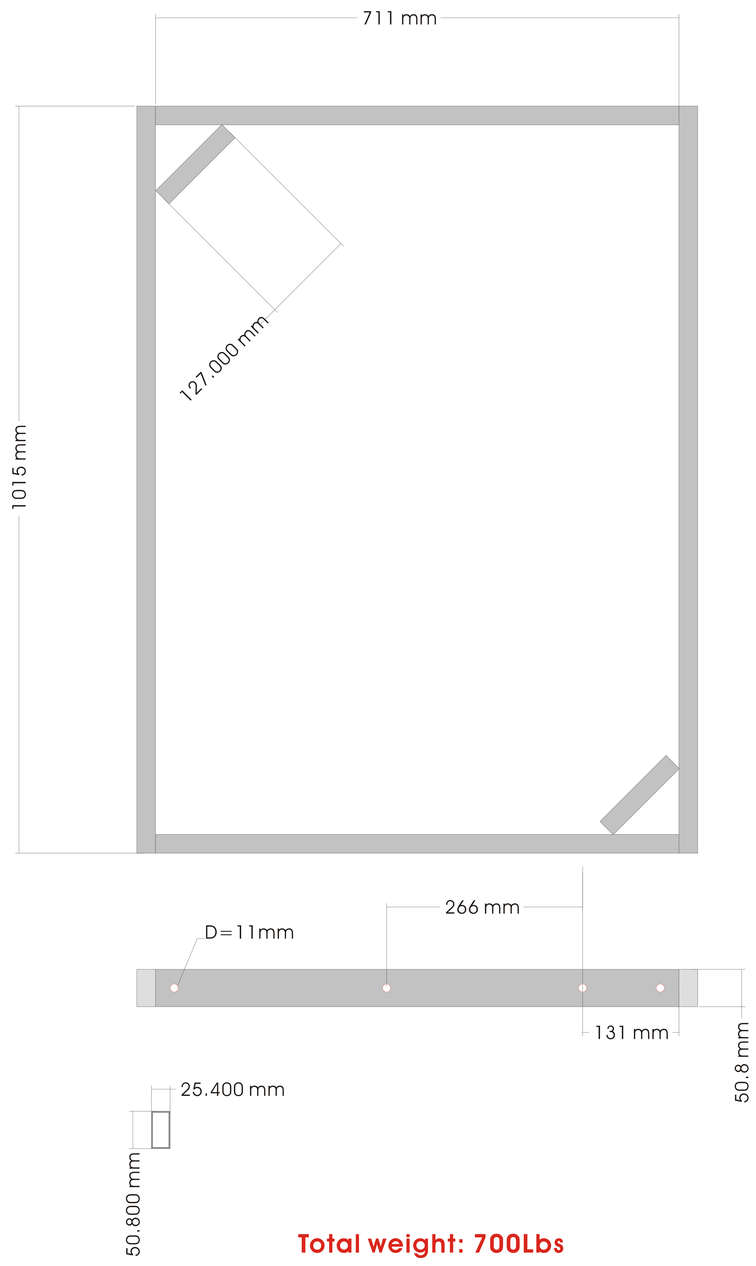

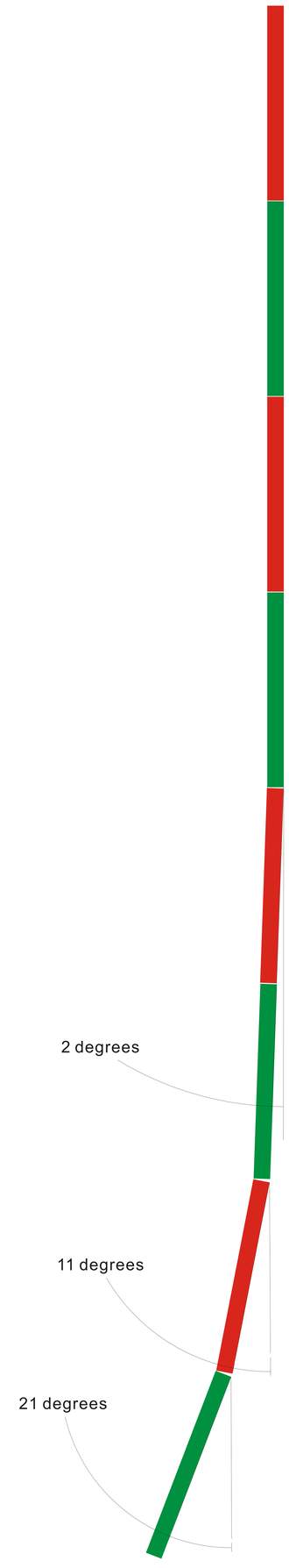

Total weight: 700Lbs

CD 48
QuickFly Rigging
more infomation:
http://csppro.com/p/cd48.asp